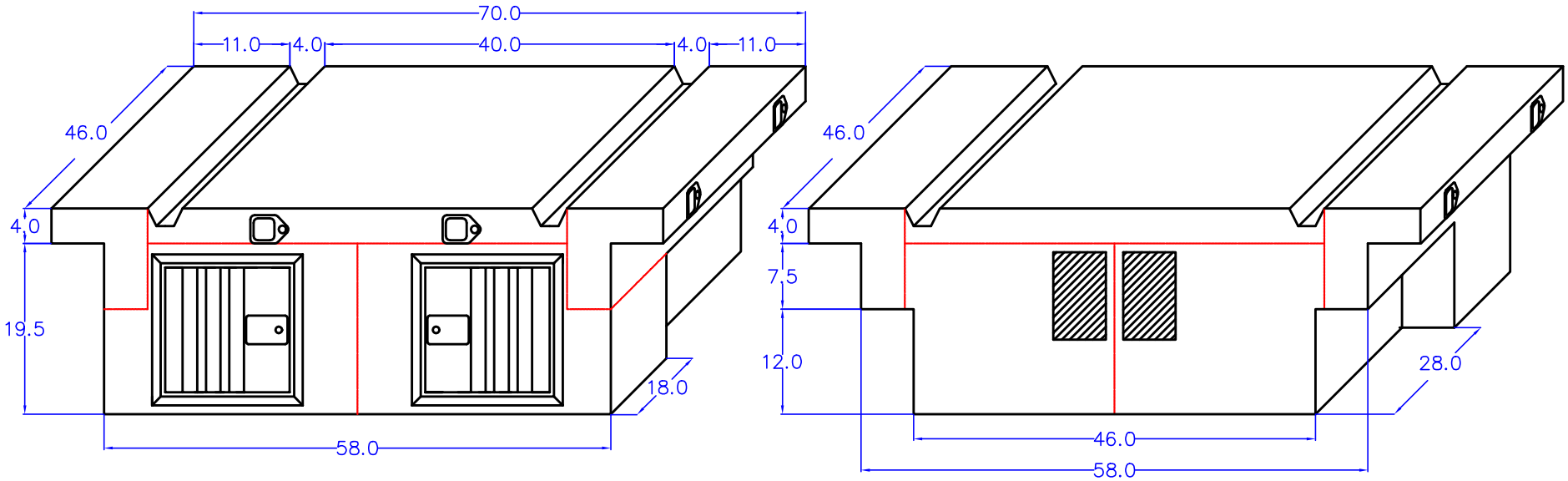
70.0
11.0
4.0
40.0
4.0
11.0
46.0
4.0
19.5
18.0
58.0
46.0
4.0
7.5
12.0
28.0
46.0
58.0